DWG. NO.		CREATED:	UPDATED:
DH0070	14G CONNECT AND CUT SAW SYSTEM	04/20/09	07/25/09

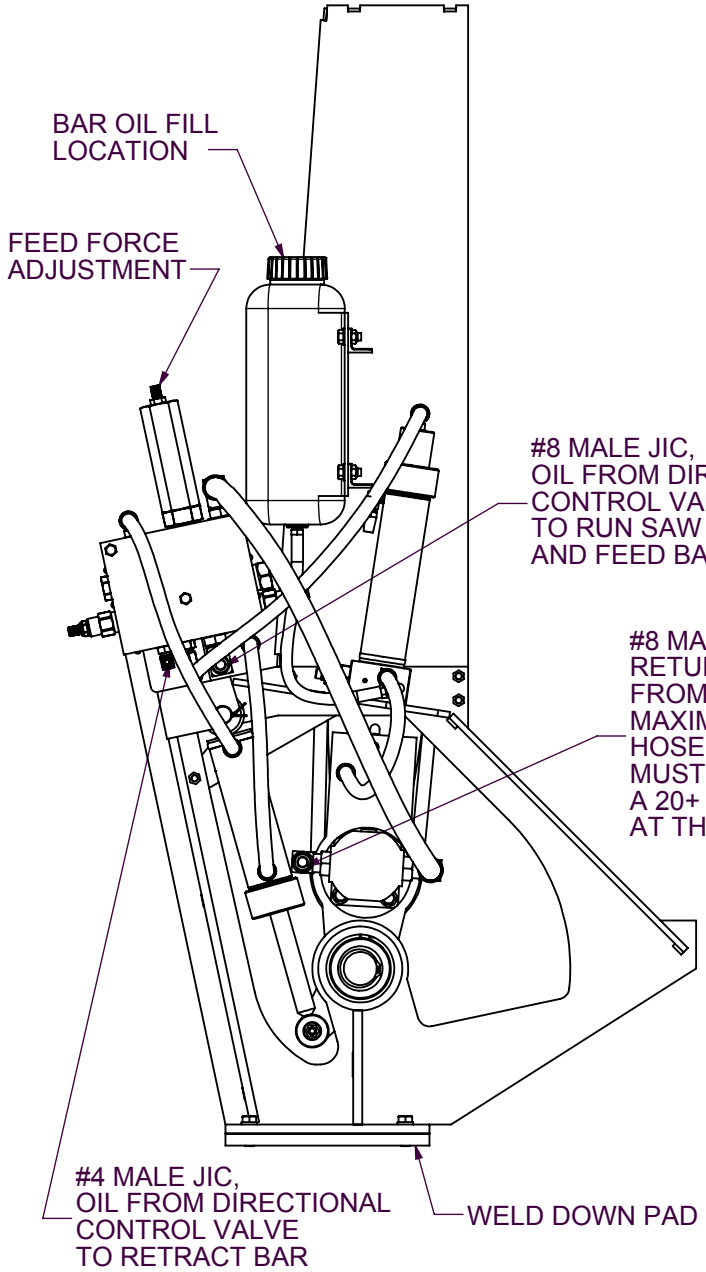

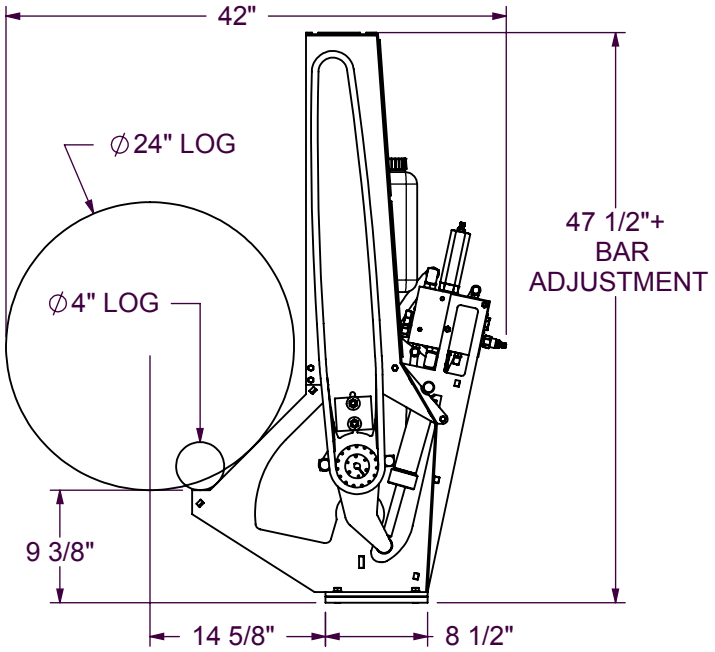

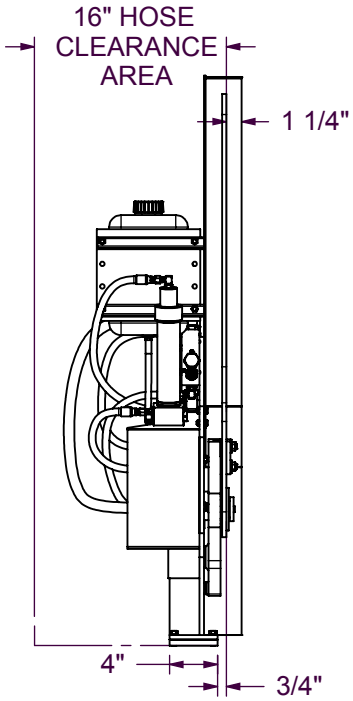

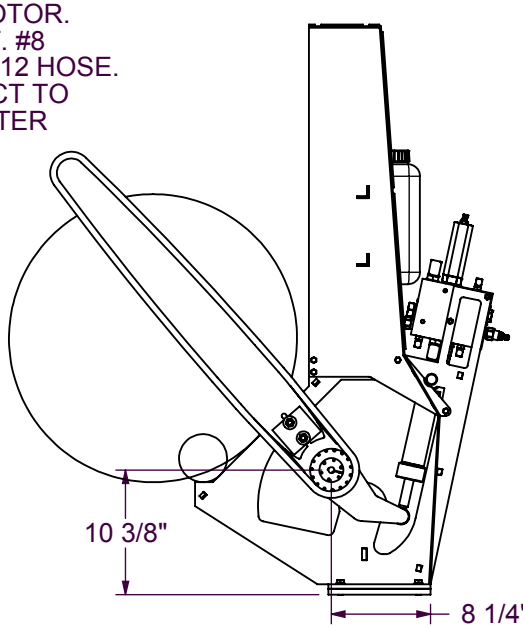

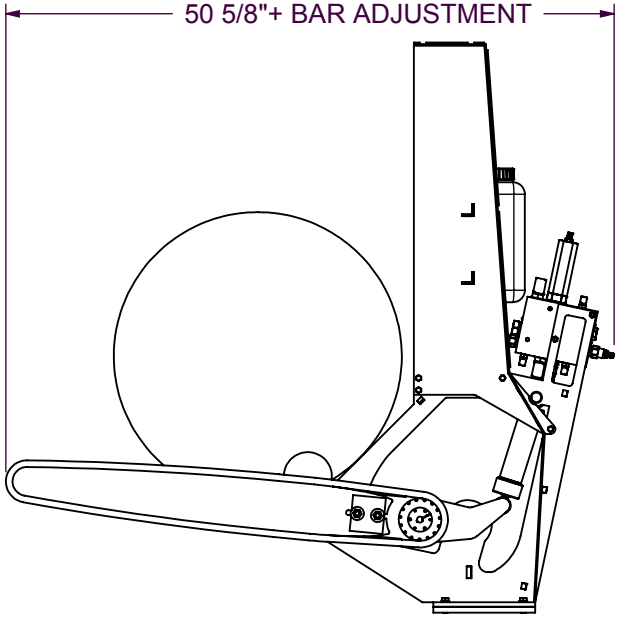

NOTES & INFORMATION

APPROVALS	
DRAWN	ED
CHECKED	
WEIGHT:	127.515 lbs.

THE INFORMATION CONTAINED IN THIS DRAWING IS THE SOLE PROPERTY OF DANZCO. REPRODUCTION IN PART OR WHOLE WITHOUT WRITTEN PERMISSION OF DANZCO IS PROHIBITED.

DO NOT SCALE DRAWING

UNLESS OTHERWISE SPECIFIED: DIMENSIONS ARE IN INCHES. TOLERANCES ARE:
ANGLES ± .5° FRACTIONS ± 1/16 DECIMAL X ± .032 XX ± .015 XXX ± .002

Sheet 1 of 1

DANZCO Inc.
1006 143rd AVE. S.E.
TENINO, WA 98589
PHONE: (360) 264-2141
FAX: (360) 264-5105